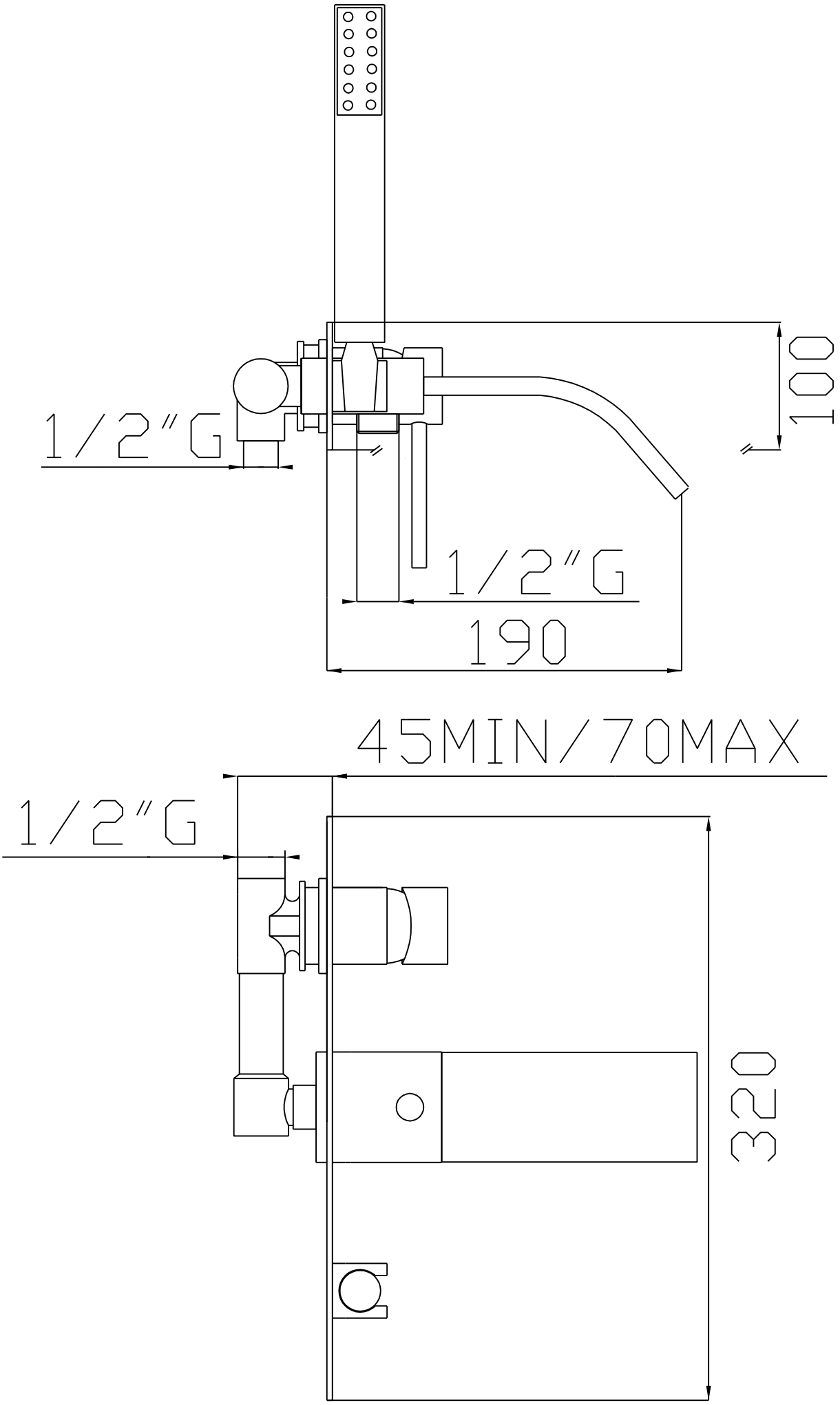
1/2″G
100
1/2″G
190
45MIN/70MAX
1/2″G
320